Homebrewer of the Month

Joseph Esmilla of Suburban Maryland

Simple circuits and quality parts yield top musical satisfaction

Enclosed are pictures of my present system which has evolved over the past six years inspired by reading *Sound Practices* as well as Japanese publications like *MJ* and *Stereo Sound*. My circuits are pretty straightforward and conventional, nothing radical or innovative. I am a violinist not an electronic engineer… I just paid close attention to using tubes that I am familiar with sonically, preferring Art Deco era preamp, input, and driver triodes for voltage amp applications in a given circuit topology based on years of listening and experimentation.

I used parts that sound good to my ears. Carbon resistors (Allen-Bradley, Riken, or carbon film types from MCM) for plate load and cathode bias. Paper in oil or copper foil caps by Jensen, Icar or Facon for coupling. Cerafine, LCR or Solen caps for PS filtration, Black Gates for cathode by-pass and Kimber TCSS or AGSS for wiring in the signal path. Lately I've gotten good results using 19 gauge solid core 99.99% silver wire with Teflon sleeving, much more affordable than AGSS.

I did all the metal work using Greenlee chassis punches with lots of WD40 to cut through 1/8" thick aluminum plates. Except for the custom maple wood bases on the 300B monoblocks, the rest of the woodwork was also done by me using pre-cut lumber and a $10 miter saw box from Sears.

I am not much of a writer but I will try to describe the pictures and throw in a few comments.

My phono front end is a Garrard 301 "grease bearing" mounted on a homemade plinth using 7 layers of 3/4" thick, 22 x 20" birch ply. I used the 301 template to cut out the first 3 layers to accommodate the turntable assembly, the remaining 4 layers are solid except for tonearm mounting provisions. After all the necessary holes were cut,I used animal glue (used by violin makers) which is very thin in consistency and does not settle quickly so that I could align every layer before clamping them to dry overnight.

For tonearms I use a Fidelity Research FR64fx and an Audio-Technica ATP12T. My cartridges are an Ortofon SPU Classic GME and a Denon 103R in an Orsonic headshell. Both cartridges are fed through Mogami microphone cables to Tamura TKS 83 MC step-up transformers.

The SPU GTE is a very musical cartridge, very lush and delicate sounding. I listen to it to enjoy music by candlelight while sipping a glass of cognac. On some recordings, it can sound rather veiled and this is when I switch over to the 103R which is perfect for playing recordings that sound rather "slow" since it is an "accurate" sounding cartridge.

The FR64 and SPU are *gifts* from buddies in Manila who formed a club called SETUP (Single-Ended Triode Users of the Philippines) whom I have influenced to dabble with DIY and subscribe to *Sound Practices* because of their frustration with "high-end."

Initially, I thought I cured the 'impulse' upgrade syndrome (from WATT/Puppies to GRAND SLAMMS, SME V to Air-Tangent, etc.) that plagued my buddies—however, now that they've seen the light, I am constantly bombarded and hounded by e-mails discussing the merits of Amorphous core F5002, Permalloy NY15s, 10429s and Kanno OPTs. They've even built a transformer-coupled line level preamp using Tango NP216N iron. I'm sure this keeps Yokota-san of Sound Shop Big busy and happy, but I'm afraid their wives and girlfriends might not talk to me the next time I visit Manila!

My phono stage is based on the RCA tube manual phono circuit, using 5691s and battery bias. The line-stage is similar to the Berman featured in *SP #15*, with a 76 DC coupled to a 6SN7 cathode follower. I bypassed the cathode resistor on the 76 with a 100uf/10V cap since this gave a warmer and airier sound. To minimize microphonics on the 76s, I mounted the 5-pin sockets on rubber isolation spacers I found in a local hardware store that look very similar to those used in the Marantz 7.

The outboard power supply (barely visible in the picture below beside the left 300B monoblock) is a choke input type using a 5AR4/GZ34 rectifier producing about

Joseph and his DIY audio system in his 12 x 15 x 7.5' listening room

Globe 245 amp: Circuit is an SRPP 5691 with 2.2k,1W AB resistors,Facon .22uf paper in oil, 245 and a Tamura F475,5k OPTs. Kimber TCSS wire throughout.

275V for the line-stage and around 250V for the phono stage and a rectified DC filament line.

I only like SRPP with hi mu, lo gm tubes, finding the 6SL7/5691 best for the job. I tried SRPP 5687 and 6SN7 and understand why other people don't like SRPP.

I use AC filament supplies on all my power amps. In spite of the lower noise floor afforded by DC heated filaments on DHTs, I cannot find myself liking the "leaner"tonal balance.

At the moment, I have five SE DHT amps at my disposal, this includes a Stereo 245 with Tamura F475s, Stereo 10/VT25A/801A with Tango FW20-7S, Stereo 300B with XE60-3.5s, a pair of monoblock 300Bs with Tamura F7002s and a Stereo 2A3 with U808s hooked to my TV/VCR hi-fi set-up in the bedroom driving "cheap 'n cheerful" (11 bucks a pop from MCM or Parts Express) paper coned 4 1/2" Pioneer full-range units in a homemade TQWT cabinet.

Except for the 245 amp, all my power amps share the same basic input/driver topology - DC coupled two stage circuit using low-to-medium mu triodes. My first attempt in building an SE amp used both sections of a 6SN7. I tried RC coupling between stages but prefer the added texture and dynamic nuances afforded by DC coupling.

Later on, I investigated using 56, 76 and 27 since they are claimed to possess greater linearity than the 6SN7. After several prototypes and listening sessions l kept the 6SN7GTB at the driver stage preceded by a 76 or 56. Using a 76 as a driver tube just does not cut it for me; it sounds too lean. I also found that I like the airiness and warmth afforded by operating the driver tube around 6 or 7ma.At close to max. current (~10ma.), the sound becomes dry and analytical for my taste. For the input stage I shoot for about 3 or 4 ma. of current.

My latest 300B monoblocks use Cunningham 327 "mesh plates" (pulled out of an old Atwater-Kent radio I found at a flea market) at the input stage, DC coupled to 1/2 6SN7GTB. This combination is very transparent across the frequency band— less midbass crud and better definition, an almost 245 or WE205D-like vividness in the mids with delicacy and airiness in the highs!

The WE300B re-issues are indeed better than any version of the Chinese clones, but to me, the mesh-plate 327 probably contributed more improvement. I am talking about subtle differences here and the best way to describe it is that, once I take away the 327/WE300B combo, I know I'll miss

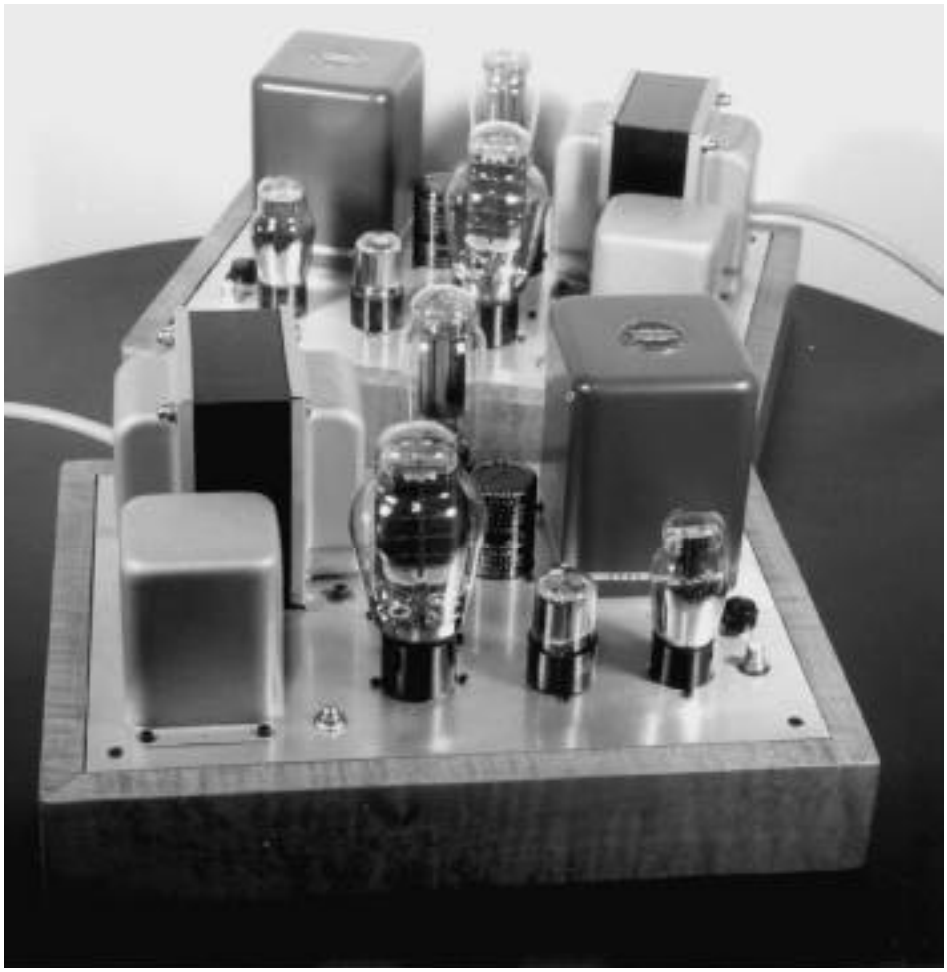

300B monoblocks:Circuit is a 76-DC-1/2 6SN7GTB-RC-300B-Tamura F7002, 3.5k permalloy OPTs. CLCLC power supply with a GZ37 rectifier and Cerafine caps. When he finds the time, he wants to try Cunningham "mesh plate" 327s pulled out of an old radio in place of the 76s.

ABOVE: Tamura TKS83 MC step-up transformers feature selectable impedance between 3 and 40 ohms and a provision for switching two inputs.

LEFT : Garrard 301 (early version) in a base made from laminated sheets of plywood

not having them!

Both the 10 and 245 amps possess a degree of refinement and finesse I could never quite capture with 2A3s (yes, even monoplates!) or 300Bs. I use the 245 amp mostly for solo vocals accompanied by a small ensemble or piano and the 10 for jazz quartet or trio instrumental combinations. Both amps are excellent for string quartets and my choice is really dependent on my mood.

Found some Globe 280s over the summer and changed the rectifier from 5U4Gs—didn't hear a difference in sound, but looks *much* nicer.

VT25/10 amp - 76-RC-76-RC-10/VT25-Tango FW20-7S. CLC PS using a 5R4GY rectifier.

Stereo SE 300B/2A3 amp using the same front-end and a similar CLC type power supply as the 300B monoblocks, but with Tango XE60-3.5s. Presently configured for SE300B operation, so that I can compare the sound of permalloy over regular "cut core"—my ears tell me that permalloy does have the edge in terms of midrange transparency but this is only obvious upon direct comparison.

Lately though, I'm realizing that there are Tango and Tamura "signature sounds", the Tango tending to be leaner and analytical whereas the Tamura is "juicier." Regardless of core material, both brands produce high quality sound and I would not want to open another debate as to which is *better*, but my taste tends to favor the Tamura.

For the past two weeks I've been listening and testing a pair of WE205Ds that are *en route* to Manila for my friends in SETUP. Since my power transformer (the Angela Universal) has dual HV secondaries, I soldered the 640VCT winding, changed the cathode bias resistor to a 1k, 20W and then "mismatched"the secondaries by using the 4 ohm tap to reflect a pri. Z of 7k when loaded with an 8 ohm nominally rated speaker. Actually, with 755As, it defeats the purpose since they are 4 ohms. Over the weekend I was over at my friend's house in NYC and we listened to it through his 8 ohm 604-8Gs. Using either speakers, the sound of the WE205Ds has the midrange quality of a 245 with the dynamics and slam of WE300Bs. They also go *much louder* than the 1.5W I measured—*very nice!!!*

My main speakers are Altec 755As on open baffles. I based this contraption on plans published in *Stereo Sound* "special issue" Vol. 3, 1996.The original plan called for a composite wooden material that is similar to

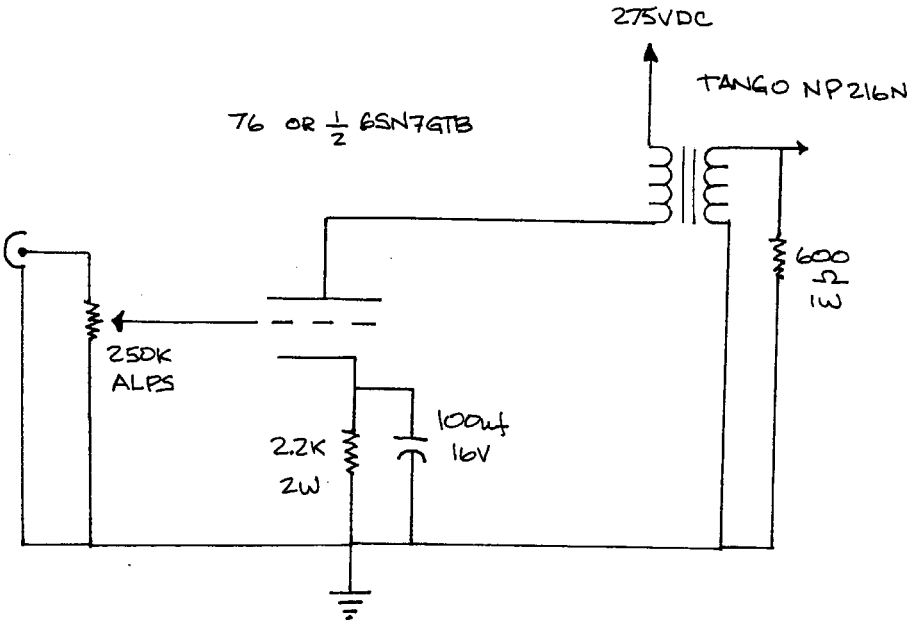

TRANFORMER COUPLED LINE STAGE USED/DEVELOPED BY MY "BUDDIES" IN "SETUP".

that used for chopping boards, but thinner, roughly 3/4". Since 3/4" birch ply is relatively inexpensive, I converted the dimensions to inches and found these baffles to work really well. For almost a year I've been using a pair of 755Cs until recently, when I found a nice pair of Altec 755As.

A friend gave me 2 cu. ft. boxes, considered by many to be *de rigeur* for 755As, for comparison. After living with them for a few weeks, however, I still prefer the open-baffle for either 755A or 755Cs.

755Cs go about half an octave lower in the bass with less high-frequency extension compared to the 755A—could this be psycho-acoustic? In the midrange, the 755A wins, no contest. To me, however, the 755C is still a sonic bargain since it probably does 85-90% of what the 755A can in the midrange, that's why I'm keeping mine as a spare.

The sound is very reminiscent of original Quads I had ten years ago. In terms of usable frequency range, they are equals. Just like Quads, there are no "boxy" colorations, an open and airy sound typical of dipoles, very life-like midrange, BUT much better rendition of dynamic contrasts and musical nuances when driven by single-ended DHT amps.

With a 300B or 2A3 amp, I can listen to Mahler symphonies on this system in my average sized room. The 10/VT25 and 45/245 being more suitable for the rather intimate setting of chamber music. Setting them up can be fiddly depending on your room. I used the same basic principles in finding the best placement for Quad ESLs.

I've shared this open-baffle plan with a couple of friends who were startled to find such a simple device to work so well. In fact, my friend Ding in NYC mounted a pair of 604-8Gs to enjoy his SE45 amp.

I hope others will give this setup a try. I spent about $75 for 3/4" thick birch plywood cut to size and shape by a local lumber yard and about a half day's work putting it all together.

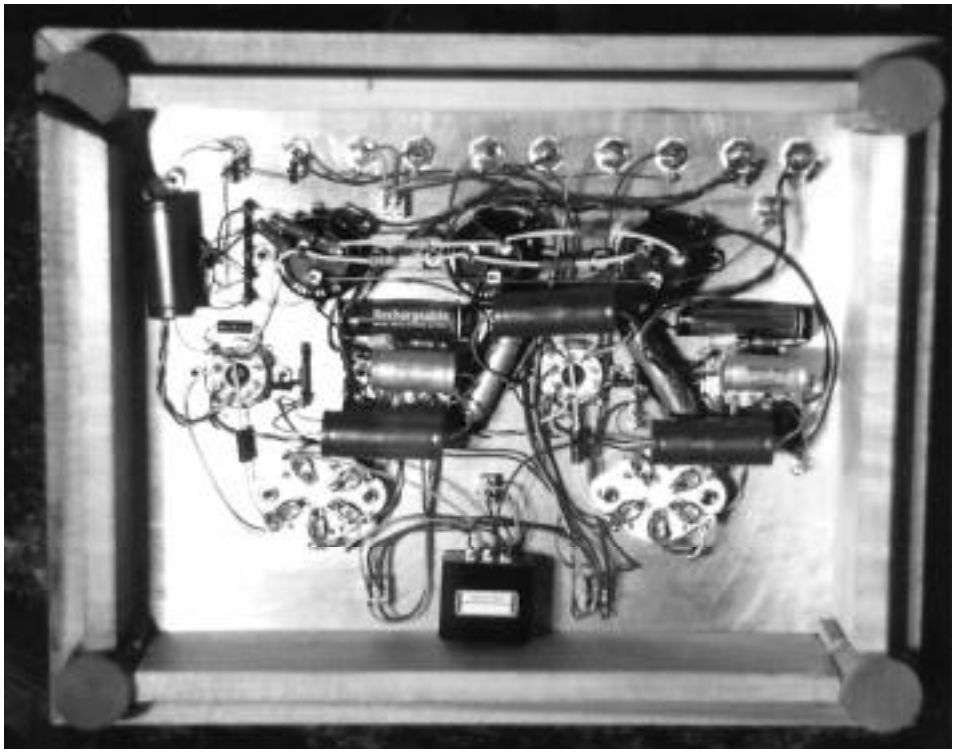

Other candidates for drivers I tried and heard include Altec 403A, 409B, Stephens FR80, Norelco 9710M and Diatone PM610Bs. Here's a summary of my initial impressions:

Diatone PM610Bs - I'm sure quite a few readers are familiar with these drivers. I acquired these in the original bass reflex box and didn't really like it too much, so I kept the drivers. The cabinet is overly resonant — colored mids, and boomy bass.

However on the open baffle, it started to sing. The midrange was warm and lucid but did not sound as "big" as the others in this group (smaller cone diameter???) and the tendency for the bass to boom was still slightly evident (too much compliance in the suspension??). Best performance with this driver is probably realized in a well braced bass-reflex cabinet or TQWT (quarter-wave pipe).

Stephens FR80 - The useable frequency range seem at par with a 755A, smooth and refined. However I found the sound rather dry and "closed-in", as if it cannot quite open up and boogie.

Altec 409B - Very efficient but also very dark sound, it surprised me that in spite of

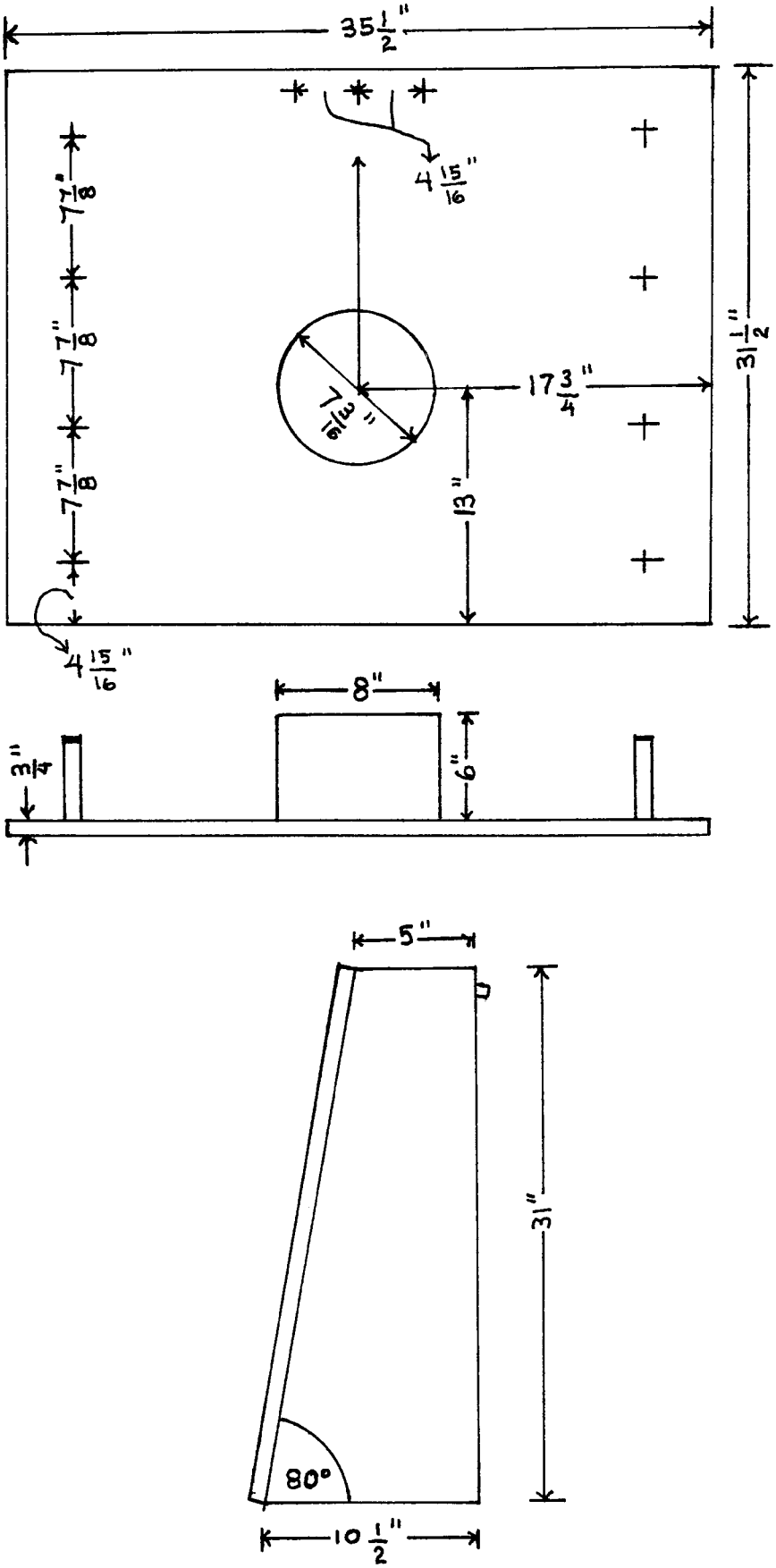

the co-ax design, it had the least amount of treble output from this group. Maybe it will appeal to those who like BASS…or perhaps, I just had a pair of duds!

Altec 403A - this is a pretty decent sounding unit but unfortunately I only have one unit and had to listen in mono. The treble sounds more extended compared to a 755C. As nice as the tonal balance actually was, the midrange did not possess the "snap" of either 755s.

Norelco 9710M - Found this single NOS driver at a radio swapmeet over the summer. Again I had to listen to this in mono. There seem to be a lot of potential with this driver. It gives a totally different presentation compared to a 755A; with more bite and snap. Very dynamic and involving, however it can be argued that it is not as refined. Anyone willing to help me find a mate to this one?

Although I listen primarily to LPs, other sources include a Tascam DAP1 DAT player which I use for recording live performances (recitals and chamber music) with Shure SM81 mics, Sony TCD5M and Marantz PMD430 portable cassette decks, a Tandberg 3500X reel to reel, Scott LT110B FM tuner and a Philips CD921 with a DITB. Except for phono, cables are Kimber KCAG, PBJ and 4TC.

After several years of being involved in this hobby, I have determined that there is no such thing as *the best* component.A satisfying audio system entirely depends on synergy and voicing, best learned through DIY.

I like to view audio components in a similar manner as violins are evaluated by professionals. Guarneri del Gesus and Stradivariuses are established workhorses for world-class caliber violin virtuosos. Heifetz used a del Gesu throughout almost his entire career, whereas Milstein and

---

Building tips for the Open Baffle:

1.I used No. 8 - 2 1/2" "decking" screws to put the whole thing together.

2. Make sure you drill pilot holes for mounting the 'feet' and the top plate (clamps help make this task more convenient).Those 3/4" birch plys are tough!

Even with pilot holes,I had to give my hand-held electric drill a rest every now and then during assembly to prevent it from overheating.

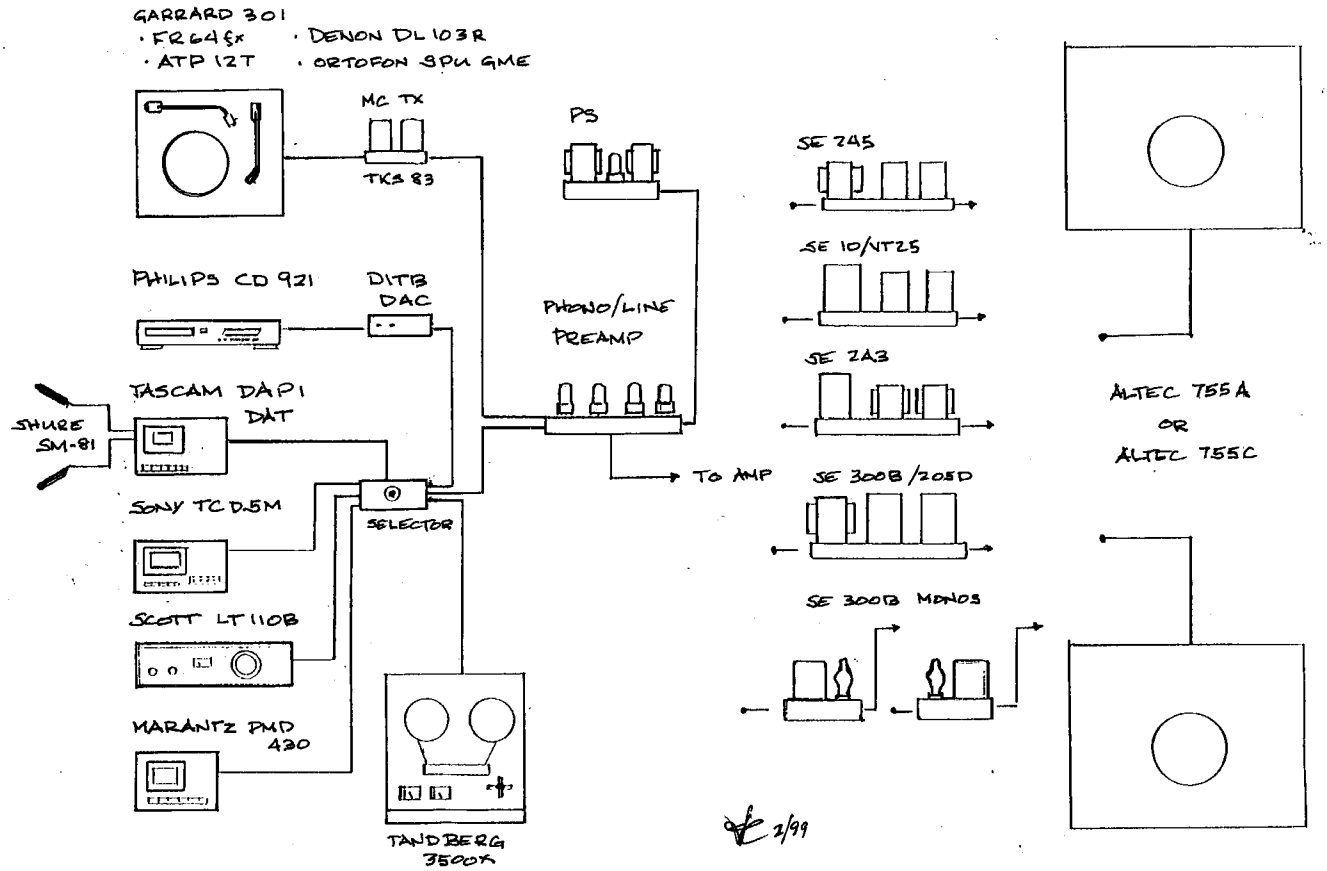

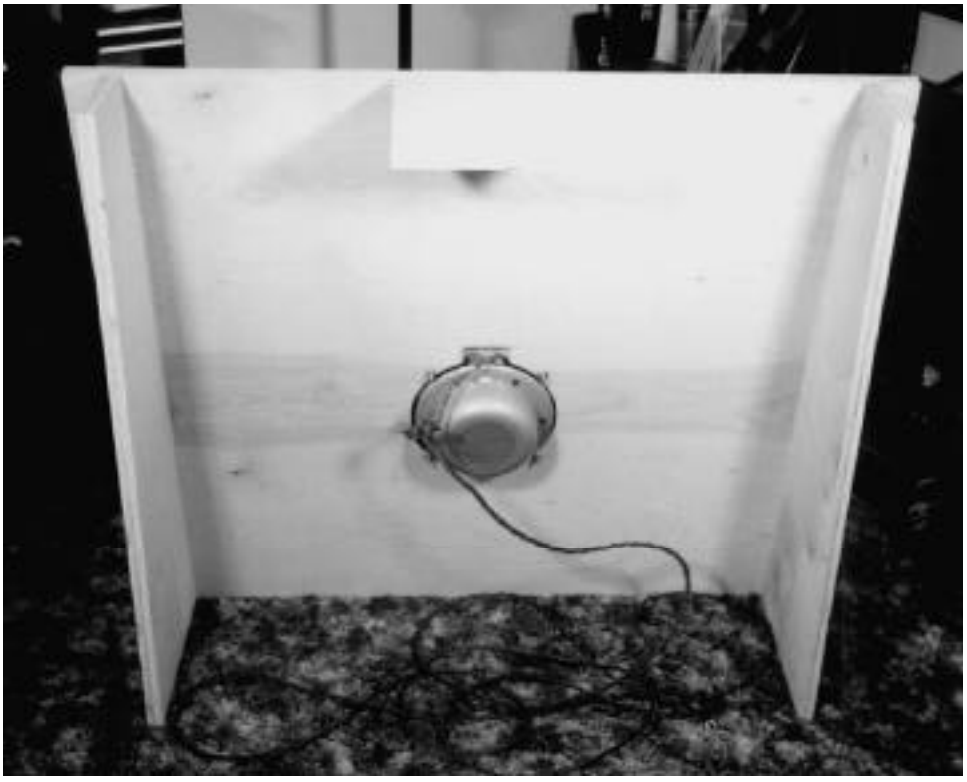

Oistrakh played on Strads. Kreisler played on both, as well as lesser known 18th and 19th century Italian, French and English violins.

There is *no* objective process to evaluate a violin. No two Strads nor two del Gesu sound exactly the same, plus the fact that a particular violin will sound different in the hands of different players.

The bottom line is, these great violinists treated their instruments as tools and chose the best compromise to allow their artistry to unfold.

Perhaps it's about time audio hobbyists examine and extract ideas from this type of attitude in pursuit of their audio ideals.

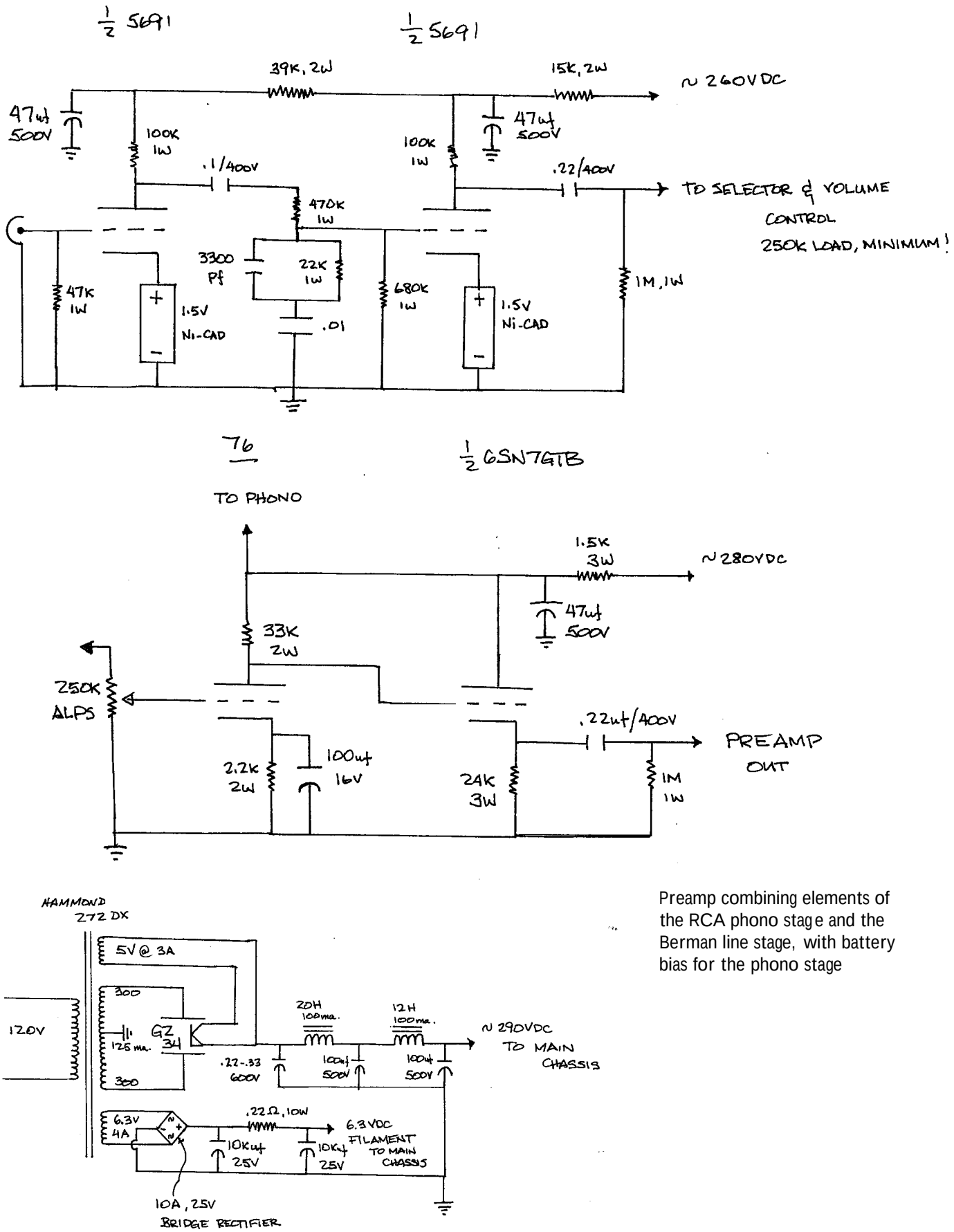

Preamp combining elements of the RCA phono stage and the Berman line stage, with battery bias for the phono stage

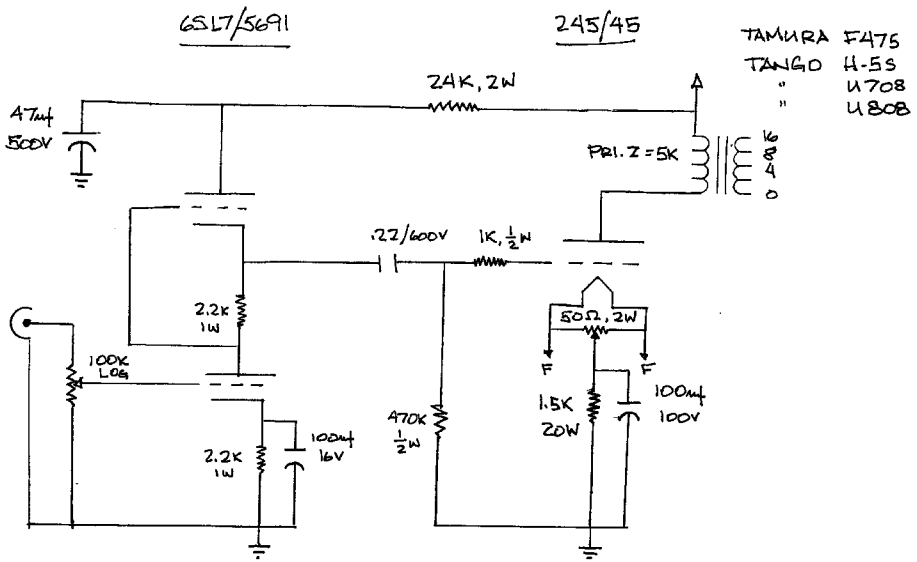

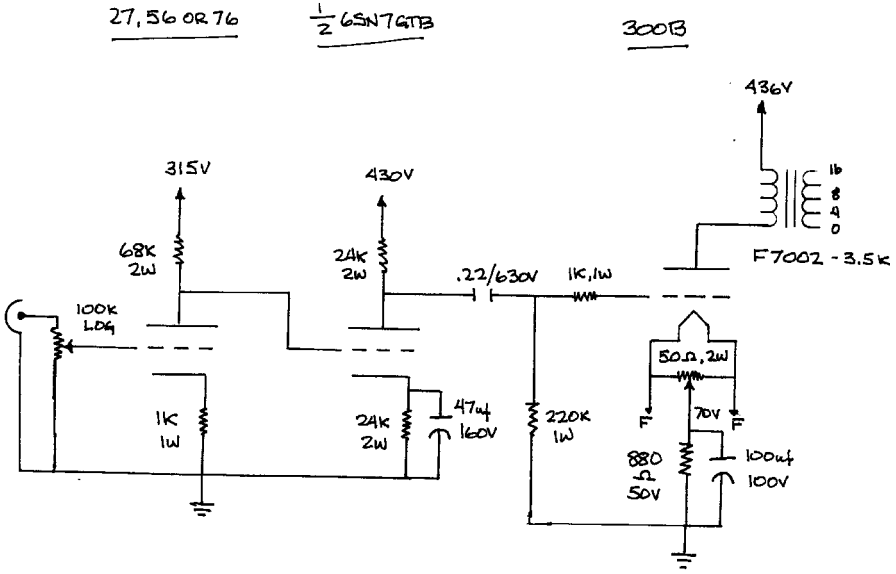

SRPP 245

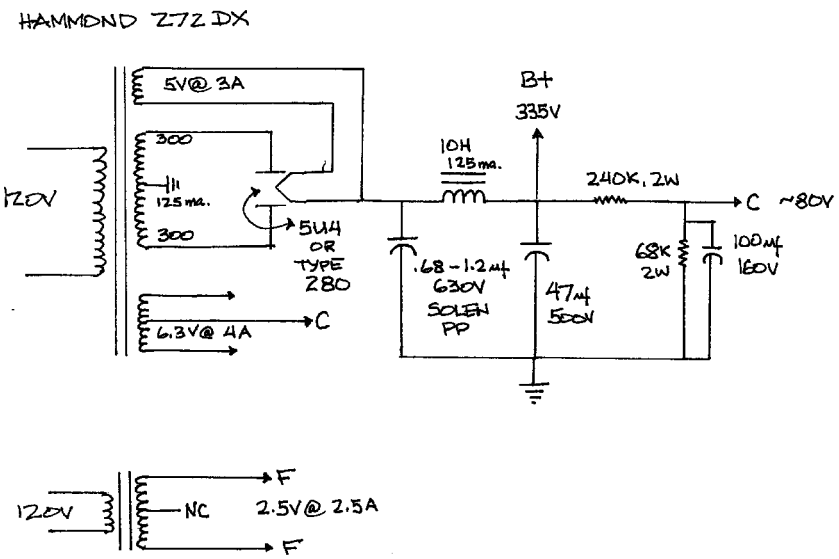

SE 300B AMP

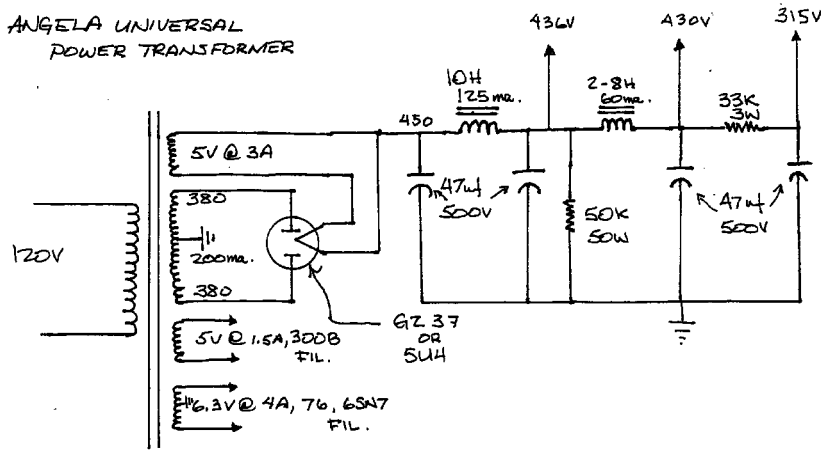

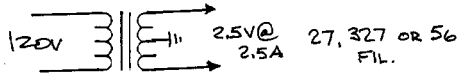

"Esmilla Labs" single 245 and single 300B amp schematics